PARTS LIST

IN-PLANT MTT LIFT TABLE

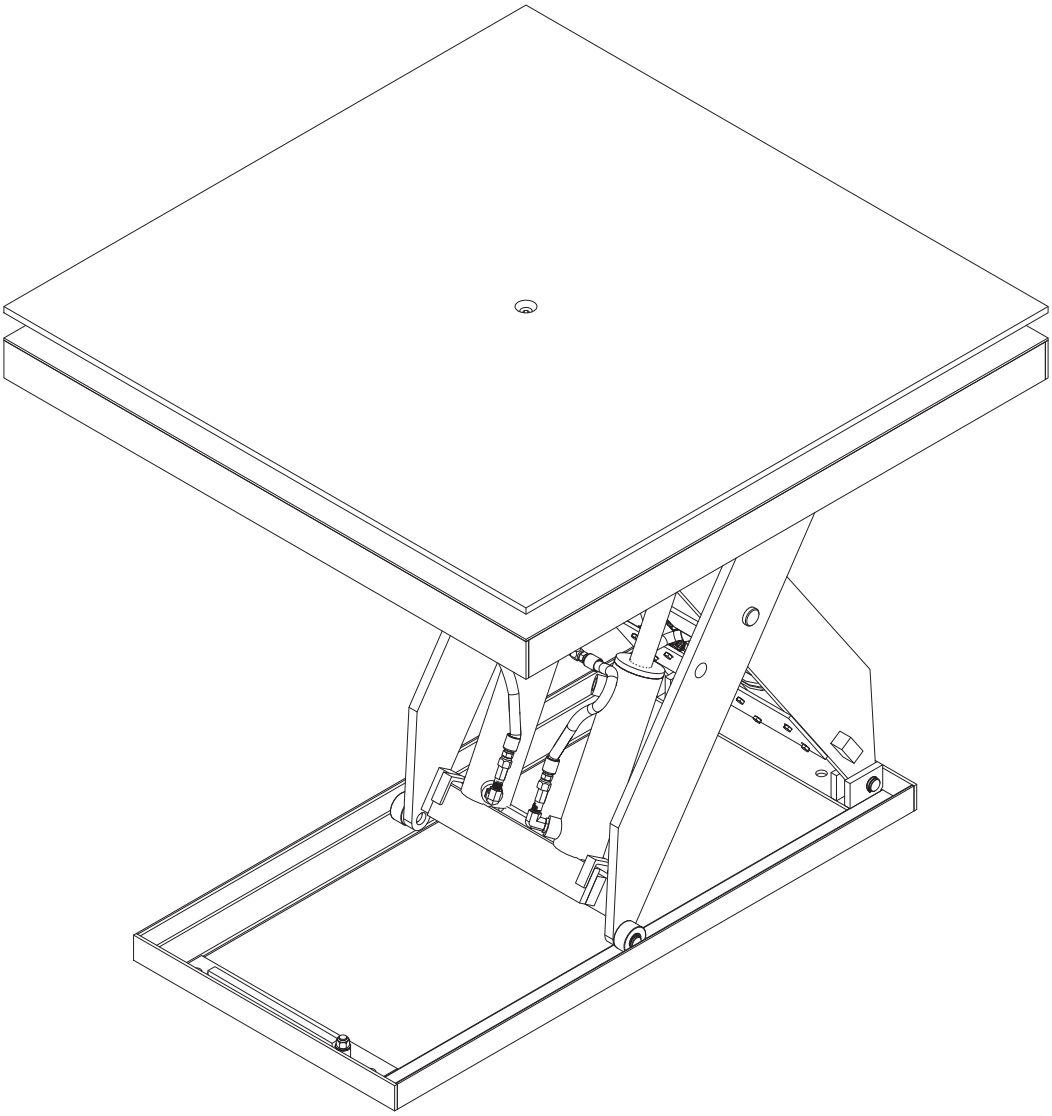

ACTUAL PRODUCT MAY NOT APPEAR EXACTLY AS SHOWN

WARNING

Do not operate or service this product unless you have read and fully understand the entire contents of this manual. Failure to do so may result in bodily injury or death.

BLUE GIANT®

STARTING FROM JANUARY 02, 2024 / SERIAL # 0.

ISSUE DATE: APRIL 29, 2025 REV. 1.1 (PART # 038-342EPL)

1.0 LIFT TURN TABLE MECHANICAL ASSEMBLY

This diagram shows a detailed view of the Lift Turn Table assembly.

NOTE: Actual product may not appear exactly as shown.

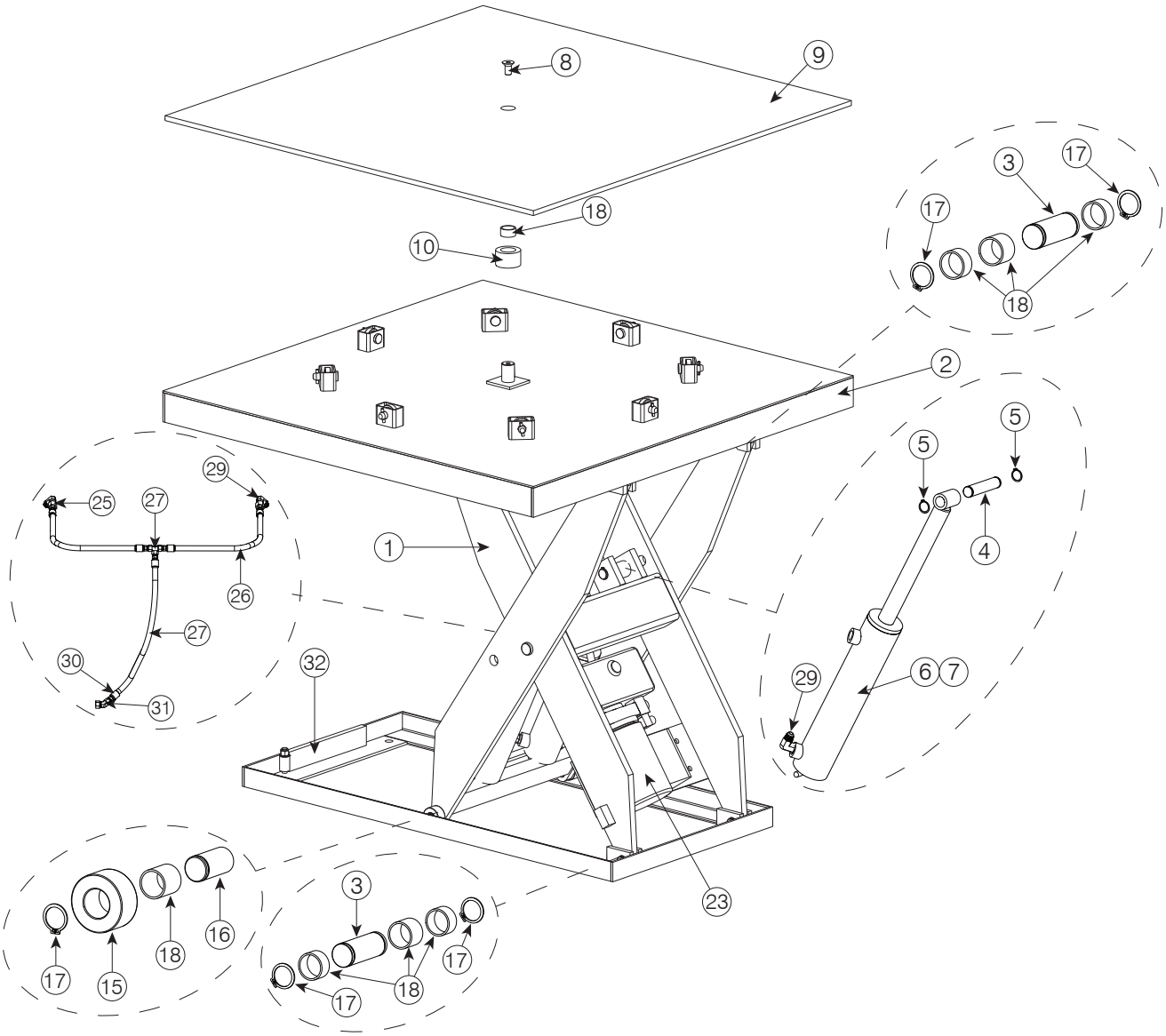

ITEM	QTY	PART NO.	DESCRIPTION
3	4	071-0102	LEG BLOCK PIN, 0.87ODX2-3/8L
4	2	071-0098	CYLINDER PIN,1 ODX4-3/4L
5	4	071-0078	RR-1 (RR-1 EXTERNAL RETAINING RING)
6	1	Varies on Model	CYLINDER,WELDMENT,3"DIA,8" STROKE,SIDE D
7	1	Varies on Model	CYLINDER,WELDMENT,3"DIA,8" STROKE,SIDE B
8	1	011-697	SCREW,SKT,COUNTER,5/8-11X1 1/4,PFD

ITEM	QTY	PART NO.	DESCRIPTION
9	1	2018912	STEEL,TURN PLATE,MTT,48X48X1/2
10	1	2019079	STEEL,TURN PLATE SUPPORT,2.5"OD,1.5"ID
11	8	107-196	CLEVIS PIN 3/4in OD X 1-5/8in L
12	8	071-0017	BEARING,BALL,1-3/4OD,3/4ID,1/2W
13	8	013-011	SPRING PIN 1/4in DIA X 1-3/8in L
14	1	071-0022	BUSHING,1.252X1.502X0.750
15	4	071-0104	STEEL,WHEEL,2"OD,1"HOLE
16	4	071-0106	WHEEL PIN,LOWER,7/8ODX1-3/4 L
17	12	071-0072	RETAINING RING,EXTERNAL,7/8"
18	19	071-0019	BUSHING,0.876X1.003X1
19	2	071-0103	STEEL,WHEEL SPACER,1 1/2 OD,7/8 ID
20	4	071-0102	LEG BLOCK PIN, 0.87ODX2-3/8L
21	2	071-0098	CYLINDER PIN,1 ODX4-3/4L
22	4	071-0078	RR-1 (RR-1 EXTERNAL RETAINING RING)
23	1	Varies on Model	POWER PACK,1HP
24	1	Varies on Model	PENDANT,2 BUTTON
25	2	071-0004	VELOCITY FUSE,1/4MALE NPT X 3/8MALE JIC
26	2	Varies on Model	HOSE,12 in LG,#6 HIGH PRESSURE
27	1	Varies on Model	HOSE,24 in LG,#6 HIGH PRESSURE
28	1	034-551	#6 JIC RUN TEE FITTING
29	1	071-0065	FITTING,ELBOW,45DEG,6502-06-06
30	6	071-0075	SWIVEL,FJX-06-06
31	2	071-0070	FTNG;ELBOW;90DEG; 3/8JIC
32	1	090-835	STEEL, BAR, FLAT, REC, 2"X3/4"
33	1	071-0139	ENCLOSURE BOX,STEEL,6X6X4 KNOCK OUT

1.1 RECOMMENDED PARTS

1.2 STANDARD OPERATIONAL COMPONENTS

Lift Turn Table STANDARD OPERATIONAL COMPONENTS			
ITEM	QTY	PART NO.	DESCRIPTION
3	4	071-0102	LEG BLOCK PIN, 0.87ODX2-3/8L
4	2	071-0098	CYLINDER PIN,1 ODX4-3/4L
5	4	071-0078	RR-1 (RR-1 EXTERNAL RETAINING RING)
6	1	Varies on Model	CYLINDER,WELDMENT,3"DIA,8" STROKE,SIDE D
7	1	Varies on Model	CYLINDER,WELDMENT,3"DIA,8" STROKE,SIDE B
8	1	011-697	SCREW,SKT,COUNTER,5/8-11X1 1/4,PFD
9	1	2018912	STEEL,TURN PLATE,MTT,48X48X1/2
10	1	2019079	STEEL,TURN PLATE SUPPORT,2.5"OD,1.5"ID

1.3 OPTIONAL SUPPORT COMPONENTS

Lift Turn Table OPTIONAL COMPONENTS			
ITEM	QTY	PART NO.	DESCRIPTION
11	8	107-196	CLEVIS PIN 3/4in OD X 1-5/8in L
12	8	071-0017	BEARING,BALL,1-3/4OD,3/4ID,1/2W
13	8	013-011	SPRING PIN 1/4in DIA X 1-3/8in L
14	1	071-0022	BUSHING,1.252X1.502X0.750
15	4	071-0104	STEEL,WHEEL,2"OD,1"HOLE
16	4	071-0106	WHEEL PIN,LOWER,7/8ODX1-3/4 L
17	12	071-0072	RETAINING RING,EXTERNAL,7/8"
18	19	071-0019	BUSHING,0.876X1.003X1
19	2	071-0103	STEEL,WHEEL SPACER,1 1/2 OD,7/8 ID
20	4	071-0102	LEG BLOCK PIN, 0.87ODX2-3/8L
21	2	071-0098	CYLINDER PIN,1 ODX4-3/4L
22	4	071-0078	RR-1 (RR-1 EXTERNAL RETAINING RING)
23	1	Varies on Model	POWER PACK,1HP
24	1	Varies on Model	PENDANT,2 BUTTON
25	2	071-0004	VELOCITY FUSE,1/4MALE NPT X 3/8MALE JIC
26	2	Varies on Model	HOSE,12 in LG,#6 HIGH PRESSURE
27	1	Varies on Model	HOSE,24 in LG,#6 HIGH PRESSURE
28	1	034-551	#6 JIC RUN TEE FITTING
29	1	071-0065	FITTING,ELBOW,45DEG,6502-06-06
30	6	071-0075	SWIVEL,FJX-06-06
31	2	071-0070	FTNG;ELBOW;90DEG; 3/8JIC
32	1	090-835	STEEL, BAR, FLAT, REC, 2"X3/4"
33	1	071-0139	ENCLOSURE BOX,STEEL,6X6X4 KNOCK OUT

Lift Turn Table HOSES			
ITEM	**QTY**	**PART NO.**	**DESCRIPTION**
25	2	071-0004	VELOCITY FUSE,1/4MALE NPT X 3/8MALE JIC
26	2	Varies on Model	HOSE,12 in LG,#6 HIGH PRESSURE
27	1	Varies on Model	HOSE,24 in LG,#6 HIGH PRESSURE
28	1	034-551	#6 JIC RUN TEE FITTING
29	1	071-0065	FITTING,ELBOW,45DEG,6502-06-06
30	6	071-0075	SWIVEL,FJX-06-06
31	2	071-0070	FTNG;ELBOW;90DEG; 3/8JIC

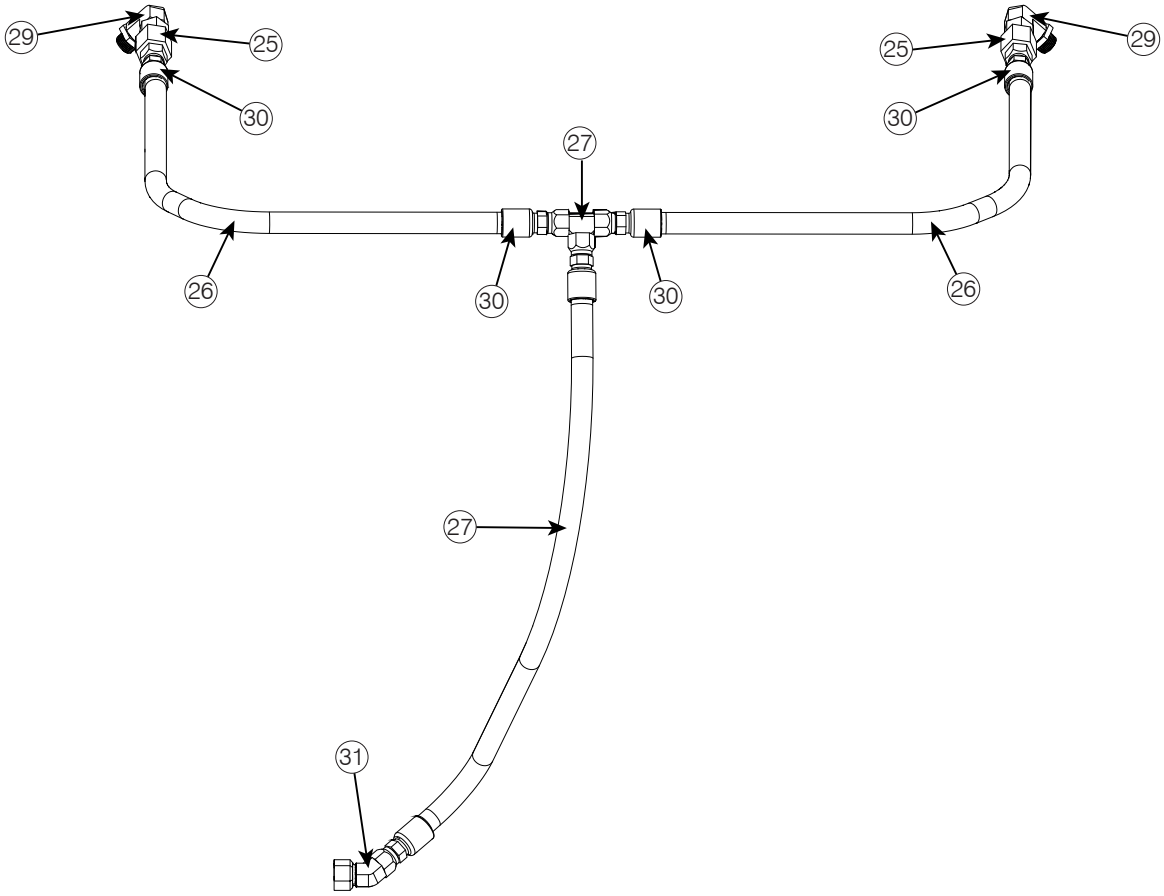

1.4 LIFT TURN TABLE ROLLING END

This diagram displays the Lift Turn Table and the field replaceable parts.

NOTE: Actual product may not appear exactly as shown.

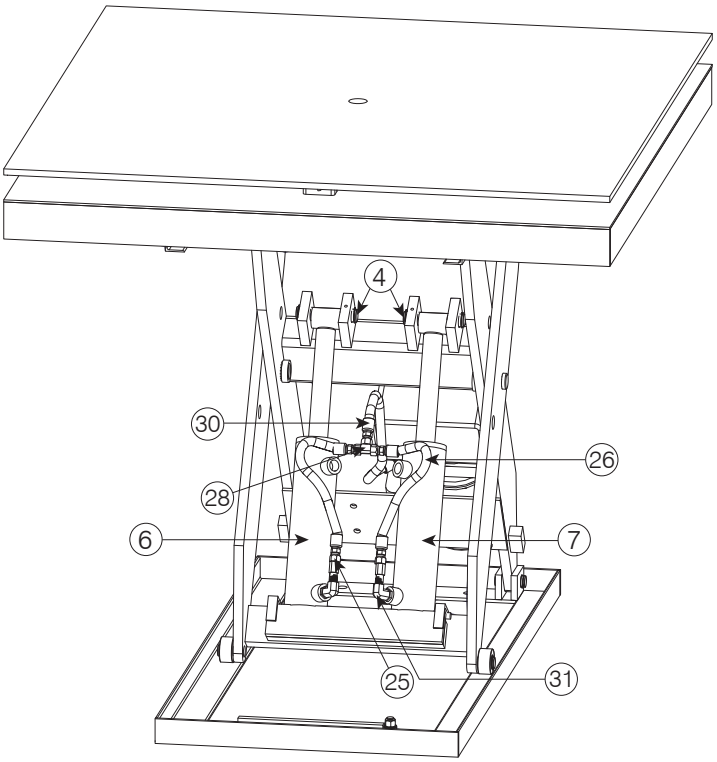

1.5 LIFT TURN TABLE LOWER FRAME AND ROLLING END DETAIL

This diagram displays the Lift Turn Table skeleton and the lower frame components.

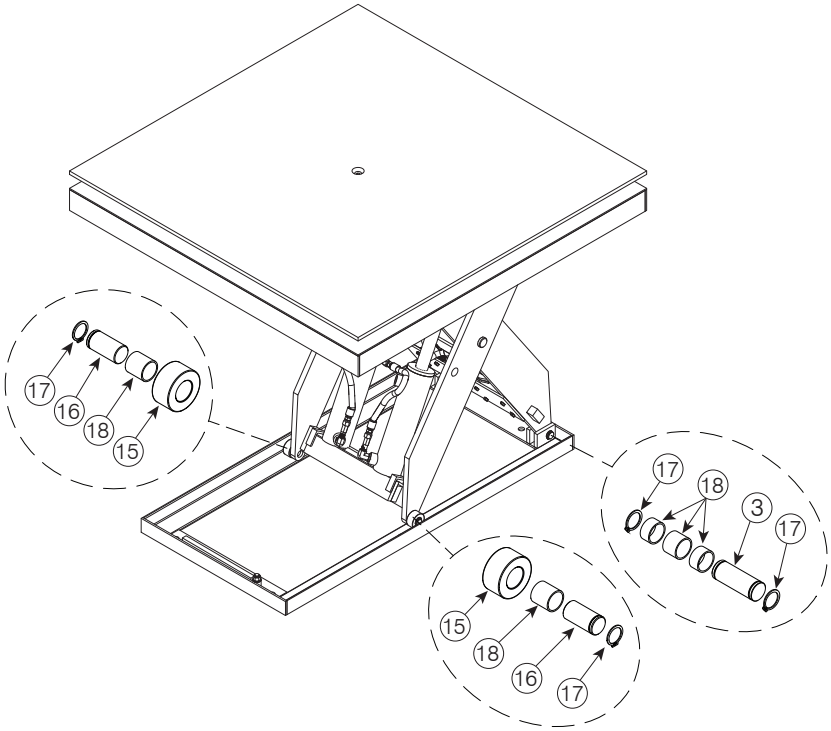

1.6 LIFT TURN TABLE UPPER FRAME AND FIXED END DETAIL

This diagram displays the Lift Turn Table and the lower frame components.

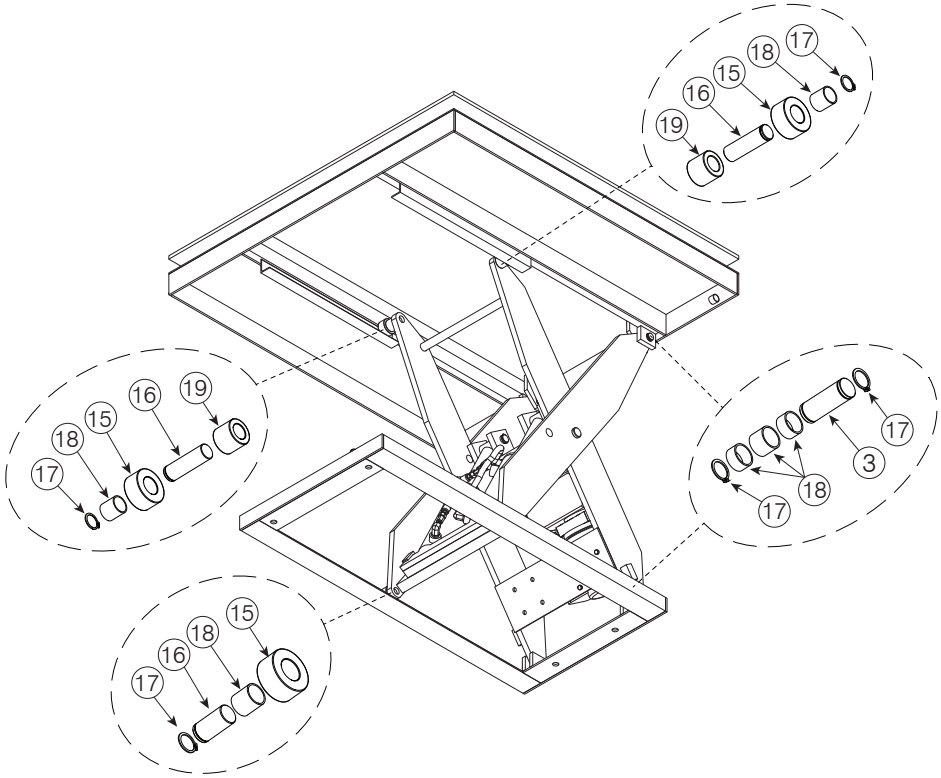

1.7 TURN TABLE ROLLING TOP DETAIL

This diagram displays the MTT LIFT TABLE components.

NOTE: Actual product may not appear exactly as shown.

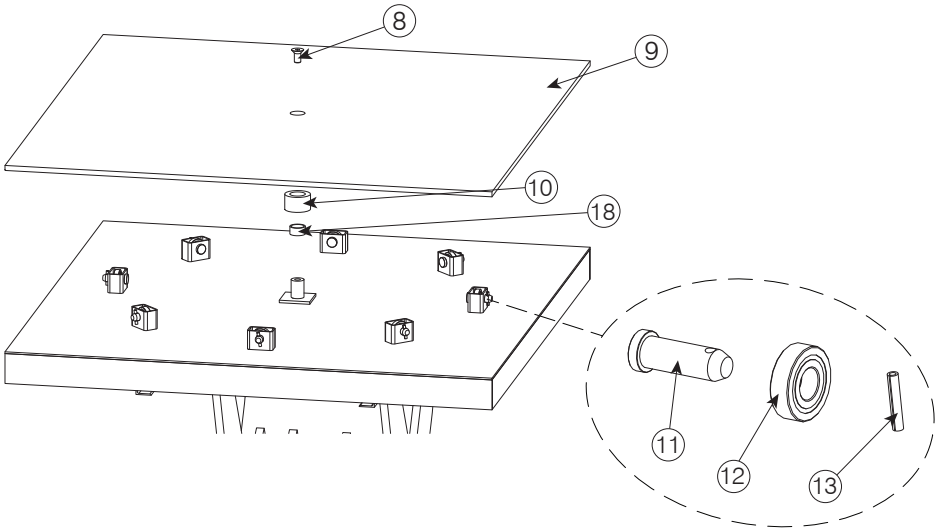

1.8 ACCORDION SAFETY SKIRT

This diagram displays the accordion safety skirt hangers (if present) under the deck and where to anchor it on the lower frame.

NOTE: Actual product may not appear exactly as shown.

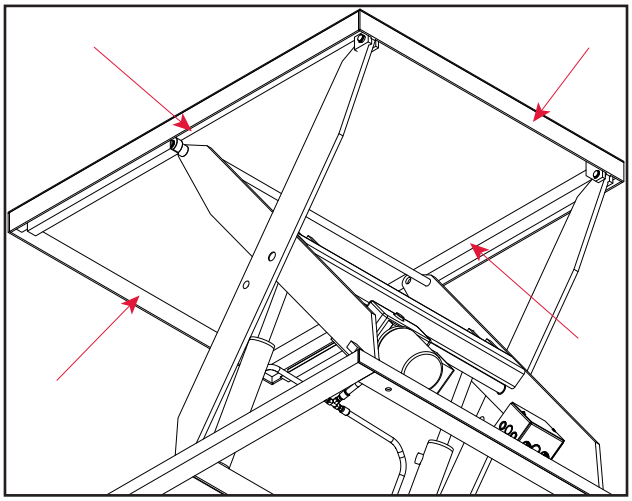

2.0 POWERPACK PART INDENTIFICATION

The assembly and parts of the Powerpack are listed below for easy reference.

NOTE: Refer to the electrical drawings for specific wiring requirements

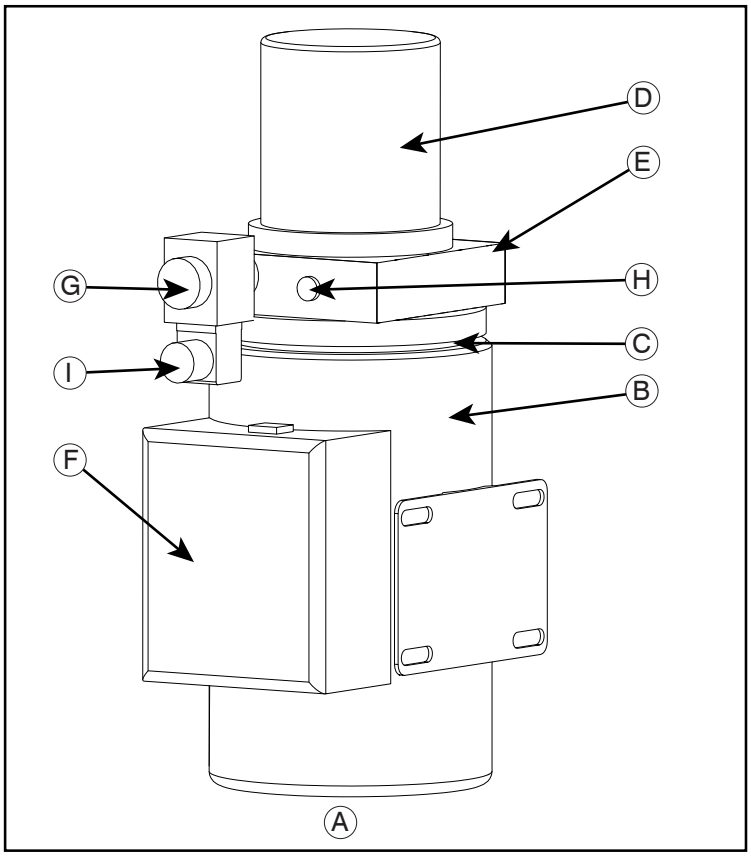

Lift Turn Table POWERPACK PART NUMBER VARIES ON MODEL		
ITEM	**QTY**	**DESCRIPTION**
A	1	POWERPACK 1HP //60 GPM
B	1	Motor
C	1	Pump (not shown)
D	1	Tank/Reservoir
E	1	Manifold
F	1	Junction Box
G	1	SV1
H	1	Pressure Port
I	1	Electrical Connection

2.1 HYDRAULIC SCHEMATIC

This diagram illustrates a sample (lift power up and gravity power down) Powerpack hydraulic circuit.

NOTE: Alway refer to site documentation for installation specifics.

TRUTH TABLE:

ACTION	MOTOR	SV1
DECK UP	X	
DECK DOWN		X

VERTICAL TRAVEL (in)	CAPACITY (LB)	CYL. QTY.
36 & 48	2000	1
	4000	2

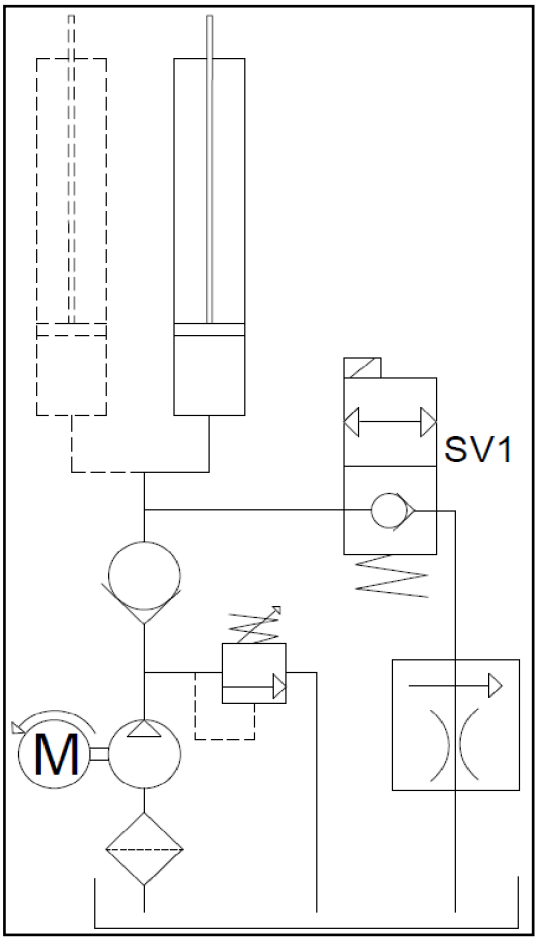

HYDRAULIC SCHEMATIC

3.0 DECAL INDENTIFICATION AND LOCATION

These labels inform operators and personnel about hazardous areas on and around the Lift Turn Table.

NOTE: Actual product may not appear exactly as shown.

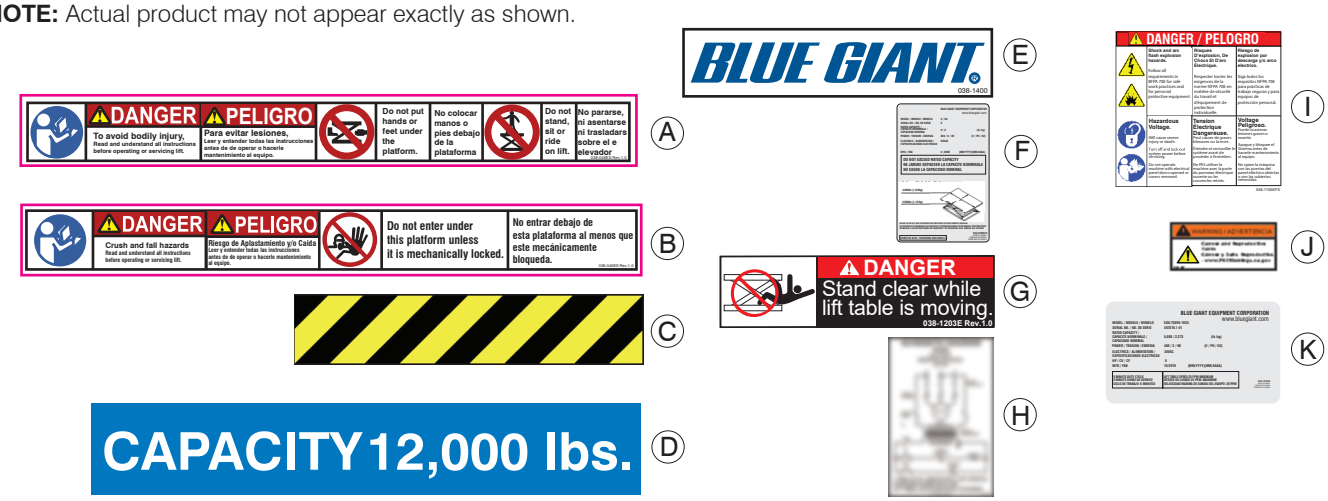

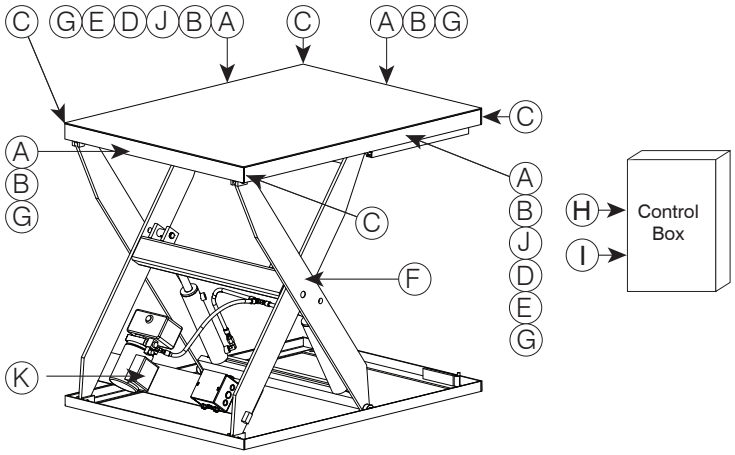

Call out	Qty	Part No.		Description
A	2 or 4 (varies on table size)	038-045	EF ES	Warns personnel to read operating instructions before using the Lift Turn Table and warn of possible bodily injury
B	2 or 4 (varies on table size)	038-046	EF ES	Warns personnel to employ the Maintenance Strut and Service Stand before working on and under the Lift Turn Table
C	4	038-237		Safety Stripe tape to alert personnel of hazardous areas and edges (i.e. toe guards, edges)
D	2	(varies on model)		Deck Capacity (example only) (locations may vary)
E	2	038-1400		Blue Giant logo (locations may vary)
F	2	038-1106EFS		Nameplate to identify the Lift Turn Table, serial number, and load transfer capacities
G	1 or 2	038-1203	E S	Warns personnel to stand clear of Lift Turn Table and the immediate area while it is in operation
H	1	114-308		Wiring diagram for facility hookup (Keep in electrical box) (Sample only shown)
I	1	038-1105EFS		Reminds personnel to lock out the electrical feeds before attempting work on the Lift Turn Table (on exterior of electrical box)
	-	-		Refer to control box, electrical diagrams, and site documentation for more specific information.
J	2	038-1097		Proposition 65 Cancer and Reproductive Harm Warning - California only (locations may vary)
K	1	038-1107EFS		Rated deck capacity and electrics (Located on Powerpack)

OPERATION PLACARD

The Operation Placard (Part. No. 038-545E) is to be wall mounted near the lift table controls. A duplicate is provided on the following page.

⚠ WARNING

APPLIES TO BLUE GIANT SCISSOR LIFTS

Do not operate this scissor lift without proper training and authorization.

READ AND UNDERSTAND THE FOLLOWING:
The instructions and warnings on this placard and in the owner's manual.
The warnings on the scissor lift decals.

Do NOT go under the scissor lift platform to clean or perform routine maintenance unless the Maintenance Strut and Service Stand are safely and securely engaged.

Prior to using the scissor lift:
• *Verify that all safety devices (guard rails, restraint chains, toe guards, and warning bells-if equipped) are in place and functioning properly.*

• *Operate the scissor lift through one complete lift / lower cycle and verify its proper operation. Inspect the scissor lift for signs of structural damage or mechanical malfunction. If damage is observed or the unit fails to operate properly, remove them from service and notify maintenance personnel immediately.*

Do NOT exceed the capacity as stated on the nameplate.

Ensure that the scissor lift serial nameplate is present and legible.

Do NOT leave the control station where it can be accidently operated or damaged.

Be aware that lift capacity may be reduced when loads are rolled over the platform sides or edges. Refer to the nameplate for reduced capacity under these conditions.

If loads are mobile, secure them in a fixed position before operating the scissor lift.

Lift operator(s) must be present during all steps of operation.

Lift operator(s) must keep an unobstructed view of lift, any operation light/horn/bell, and other operators to ensure safe operation.

Ensure that all personnel near the scissor lift are aware that it is being operated.

Keep objects, control cables, spills, possible trip hazards, and debris away from around or under the scissor lift platform/lip and its travel path.

If the scissor lift is equipped with a hinged bridge(s), the bridge must overlap the trailer bed by a minimum of 4" (102mm) before use. Do not use the bridge if it is supported solely by the lifting chain.
Hinged lips may drop unexpectedly, keep people and objects clear of the area immediately under or near the lip.

If maintenance or service is required:
• *Only authorized service personnel shall provide maintenance / service on the lift.*

• *Follow approved lockout procedures.*

• *Do NOT work on or under the lift without properly engaging the lift's maintenance strut. Blue Giant recommends the use of a secondary means (serivce stand) of securing the scissor lift while preforming repairs under the deck.*

• *The lift shall not be modified or altered without written approval from an authorized Blue Giant representative.*

• *Maintain records of repairs and preventive maintenance reports.*

BLUE GIANT®
BLUE GIANT EQUIPMENT CORPORATION

Corporate 410 Admiral Blvd
Mississauga, ON, Canada L5T 2N6
t 905.457.3900 **f** 905.457.2313

USA 6350 Burnt Poplar Road
Greensboro, NC 27409
www.bluegiant.com

If calling within North America: t 1.800.872.2583 f 1.888.378.5781 © Copyright Blue Giant Equipment Corporation 2025